2' x 2' x 2'

# Precast Concrete Comm. Pull Box

STRUCTURE ID: 222-34-C1-COM



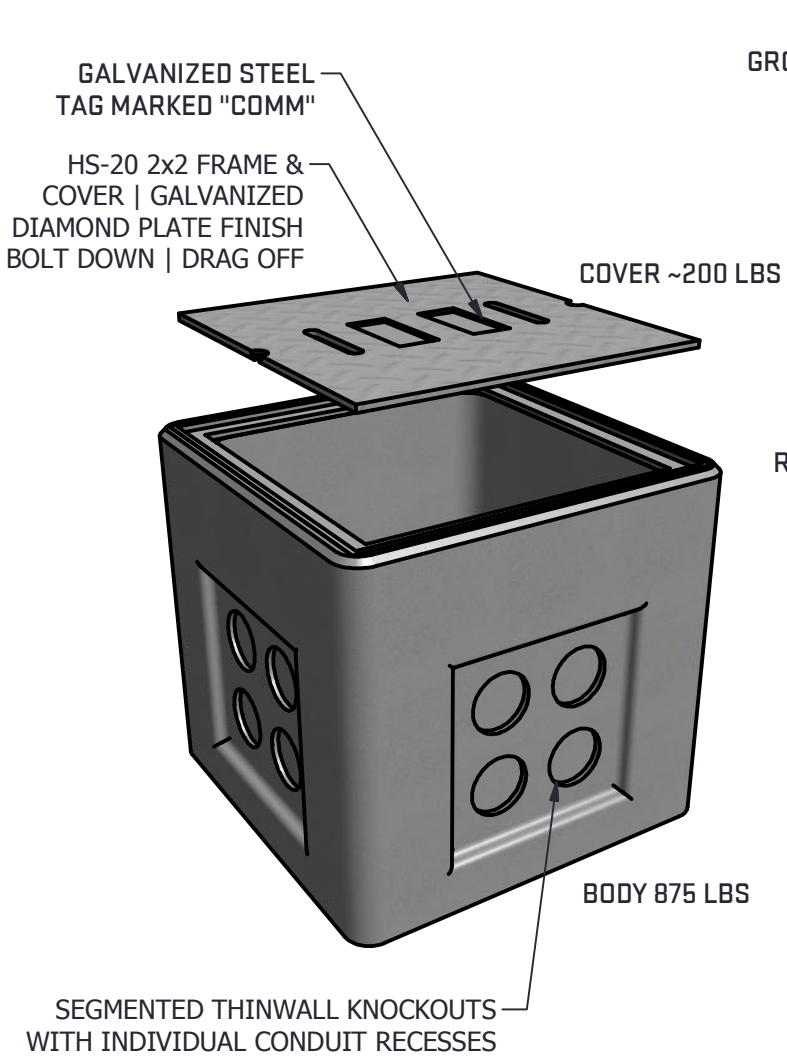


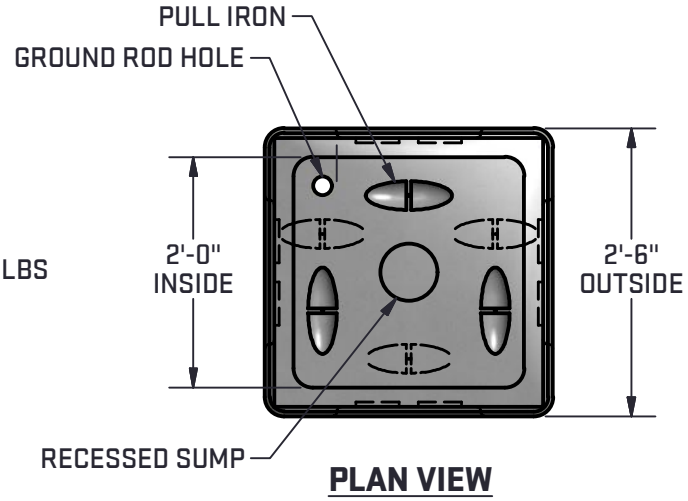


**PLAN VIEW**

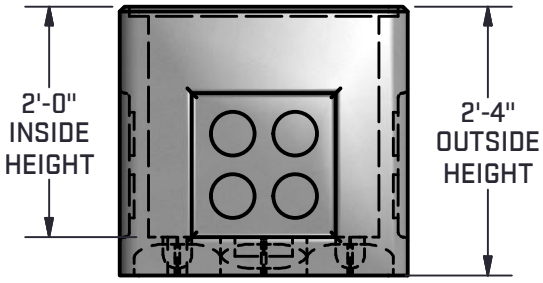


**ELEV. VIEW**

## STANDARD PULL BOX FEATURES

- Designed for HS-20 Loading
- Segmented Thin Wall Knockouts (shown)
- Pull Irons Cast In Floor (shown)
- 6" Ø Recessed Sump in Floor (shown)
- 2" Ø Ground Hole in Floor (shown)
- Hot Dipped Galvanized Steel Cover (shown)
- Diamond Plate Finish on Cover (shown)
- Smooth Corners for Safe Installation & Quality &...**It Just Looks Better!**

## PULL BOX OPTIONS

- Unistrut Cast Into Wall for Racking in lieu of Bolt Inserts
- Terminators Cast Into Wall in lieu of Thin Wall Recess
- Non-Metallic Racking
- Plastic Coated Racking
- Cast In Grounding Lug
- Pull Irons - Add or Change Locations
- Aluminum LId in lieu of Galvanized Steel Lid
- Divider Plate for Multi-Purpose Boxes

LOCKE SOLUTIONS

LOCKE SOLUTIONS
7600 S. Santa Fe, Bldg I
Houston, TX 77061

T: 832.804.7062
F: 832.804.7071
E: info@lockesolutions.com

LOCKESOLUTIONS.COM