STRUCTURE ID: 202200

Precast Concrete 5'-0" X 5'-0" X 5'-0"
Electrical Manhole

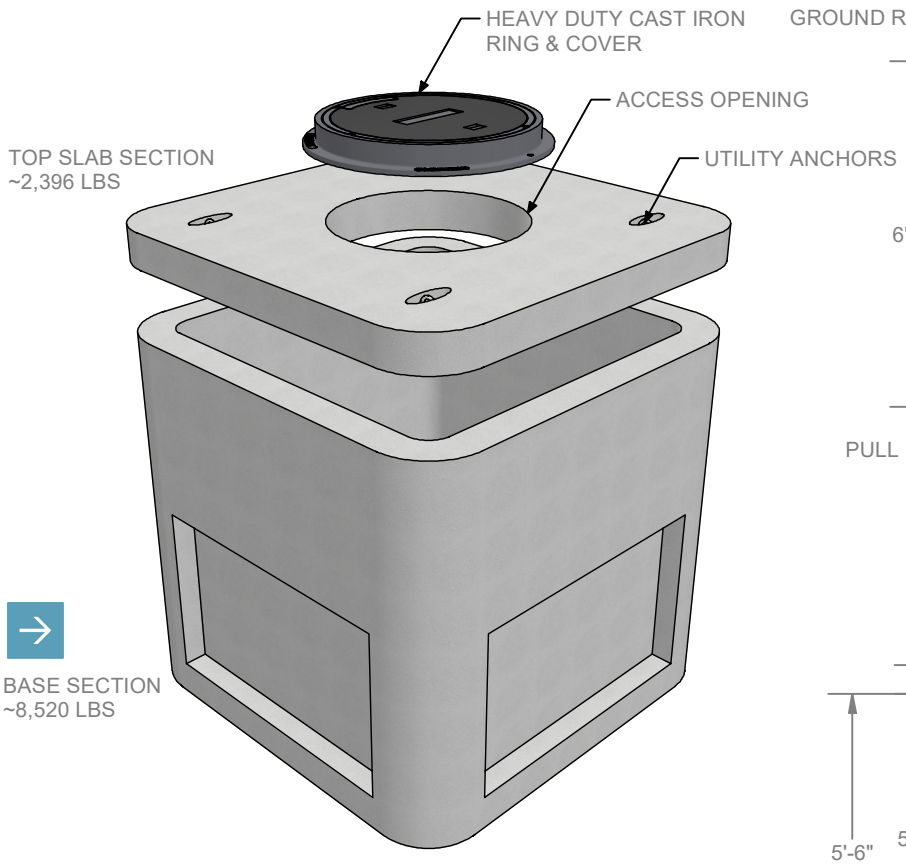

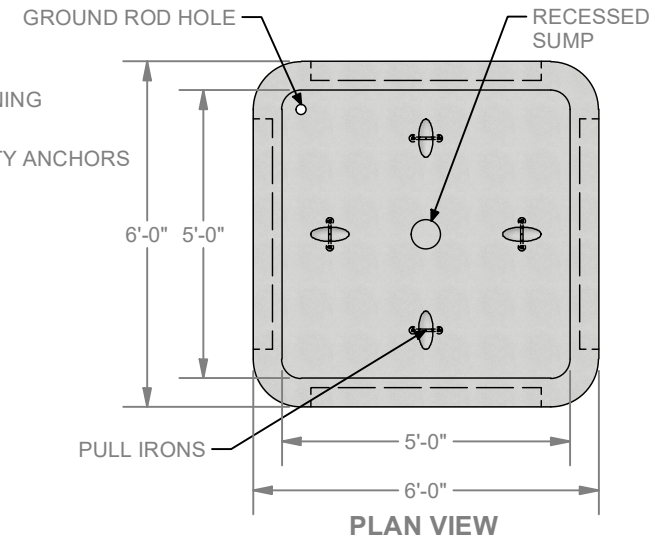

PLAN VIEW

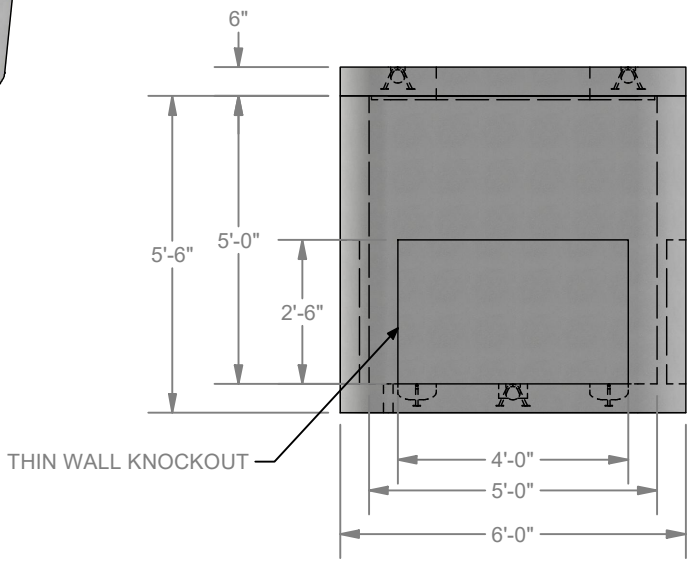

STANDARD MANHOLE FEATURES

- Designed for HS-20 Loading
- Steel Reinforced Precast Concrete
- Thin Wall Knockouts (shown)
- Pull Irons Cast-In Floor (shown)
- Ø6" X 2" Recessed Sump in Floor (shown)
- Ø2" Ground Rod Hole in Floor (shown)
- Concrete Slab Top with Cast Iron Ring & Cover (shown)
- Smooth Corners for Safe Installation & Quality &... **It Just Looks Better!**

MANHOLE OPTIONS

- Unistrut Cast Into Wall for Racking in lieu of Bolt Inserts
- Terminators Cast Into Wall in lieu of Thin Wall Knockouts
- Non-Metallic Racking
- Plastic Coated Racking
- Cast-In Grounding Lug
- Pull Irons - Add or Change Locations
- Aluminum LId in lieu of Galvanized Steel Lid
- Divider Plate for Multi-Purpose Boxes

LOCKE SOLUTIONS

PROUDLY BASED IN HOUSTON, TEXAS

T : 832-804-7062
F : 832-804-7071
E : info@lockesolutions.com

LOCKESOLUTIONS.COM