STRUCTURE ID: 102100

Precast Concrete 4'-0" X 4'-0" X 4'-0"

# Communication Manhole

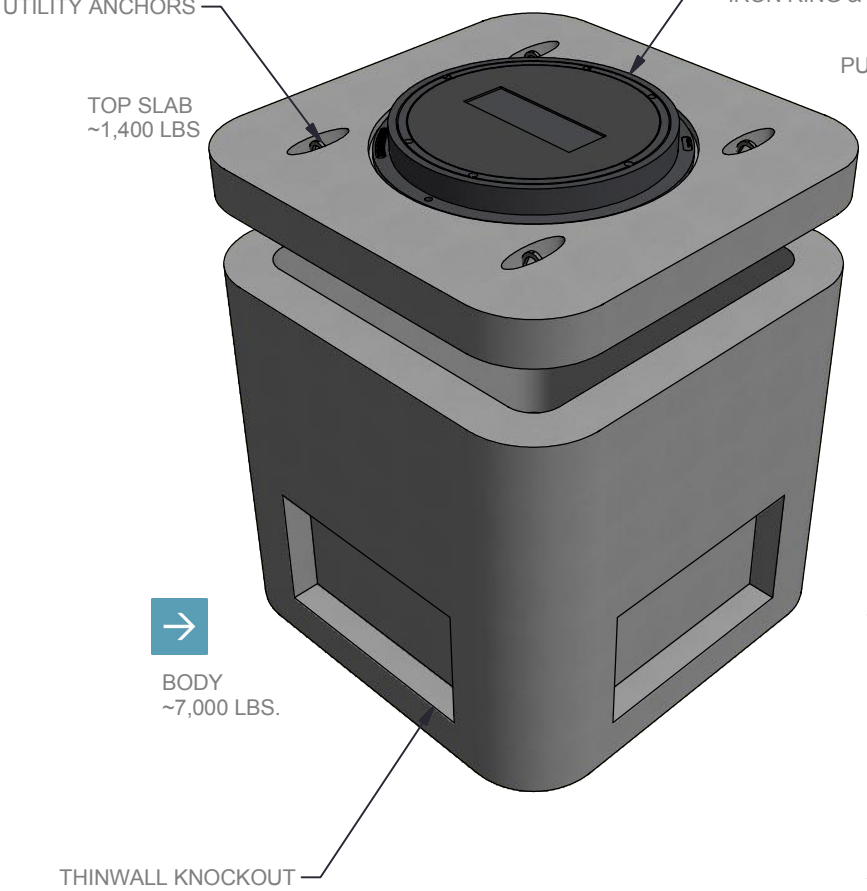


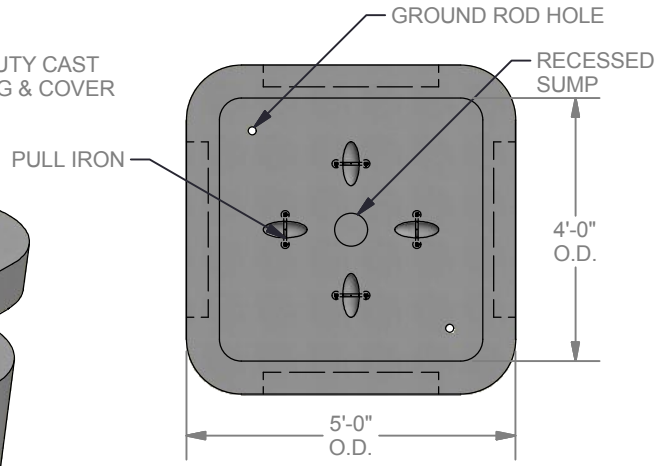


PLAN VIEW (BODY)

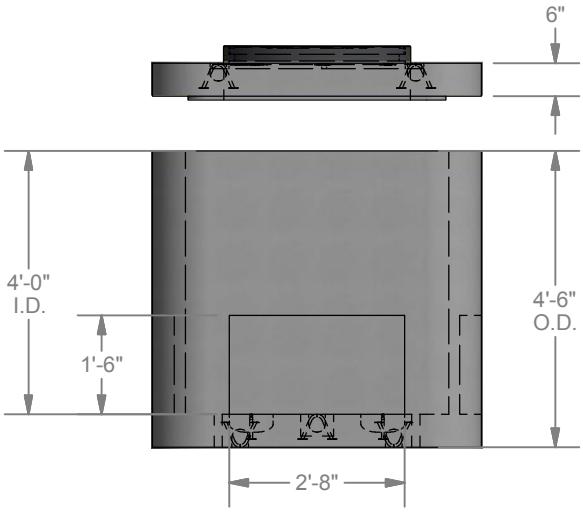


ELEV. VIEW

## STANDARD MANHOLE FEATURES

- Designed for HS-20 Loading
- Steel Reinforced Precast Concrete
- Thin Wall Knockouts (shown)
- Pull Irons Cast In Floor (shown)
- 6" Ø Recessed Sump in Floor (shown)
- 2" Ø Ground Hole in Floor (shown)
- Concrete Slab Top with Cast Iron Ring & Cover (shown)
- Smooth Corners for Safe Installation & Quality &.**It Just Looks Better!**

## MANHOLE OPTIONS

- Unistrut Cast Into Wall for Racking in lieu of Bolt Inserts
- Terminators Cast Into Wall in lieu of Thin Wall Recess
- Non-Metallic Racking
- Plastic Coated Racking
- Cast In Grounding Lug
- Pull Irons - Add or Change Locations
- Aluminum LId in lieu of Galvanized Steel Lid
- Divider Plate for Multi-Purpose Boxes


LOCKE SOLUTIONS

PROUDLY BASED IN HOUSTON, TEXAS

**T :** 832-804-7062
**F :** 832-804-7071
**E :** info@lockesolutions.com

LOCKESOLUTIONS.COM